SN74AUC1G08 Single 2-Input Positive-AND Gate

1 Features

- Latch-Up Performance Exceeds 100 mA Per JESD 78, Class II
- ESD Protection Exceeds JESD 22
  - 2000-V Human-Body Model (A114-A)
  - 200-V Machine Model (A115-A)
  - 1000-V Charged-Device Model (C101)
- Available in the Texas Instruments NanoFree™ Package
- Optimized for 1.8-V Operation and Is 3.6-V I/O Tolerant to Support Mixed-Mode Signal Operation
- I_{off} Supports Partial-Power-Down Mode and Back Drive Protection
- Sub-1-V Operable
- Max t_{pd} of 2.4 ns at 1.8 V
- Low Power Consumption, 10-µA Max I_{CC}
- ±8-mA Output Drive at 1.8 V

2 Applications

- AV Receiver
- Audio Dock: Portable
- Blu-Ray Player and Home Theater
- Embedded PC
- MP3 Player/Recorder (Portable Audio)
- Personal Digital Assistant (PDA)
- Power: Telecom/Server AC/DC Supply: Single Controller: Analog and Digital
- Solid State Drive (SSD): Client and Enterprise
- TV: LCD/Digital and High-Definition (HDTV)
- Tablet: Enterprise
- Video Analytics: Server
- Wireless Headset, Keyboard, and Mouse

3 Description

This single 2-input positive-AND gate is operational at 0.8-V to 2.7-V V_{CC}, but is designed specifically for 1.65-V to 1.95-V V_{CC} operation.

The SN74AUC1G08 device performs the Boolean function $Y = A \bullet B$ or $Y = \overline{\overline{A} + \overline{B}}$ in positive logic.

NanoFree™ package technology is a major breakthrough in IC packaging concepts, using the die as the package.

This device is fully specified for partial-power-down applications using I_{off}. The I_{off} circuitry disables the outputs, preventing damaging current backflow through the device when it is powered down.

Device Information(1)

PART NUMBER	PACKAGE	BODY SIZE (NOM)
SN74AUC1G08DBV	SOT-23 (5)	2.90 mm × 1.60 mm
SN74AUC1G08DCK	SC70 (5)	2.00 mm × 1.25 mm
SN74AUC1G08DRL	SOT-5X3 (5)	1.60 mm × 1.20 mm
SN74AUC1G08YZP	DSBGA (5)	1.75 mm × 1.25 mm

(1) For all available packages, see the orderable addendum at the end of the data sheet.

Logic Diagram (Positive Logic)

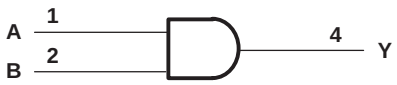

An IMPORTANT NOTICE at the end of this data sheet addresses availability, warranty, changes, use in safety-critical applications, intellectual property matters and other important disclaimers. PRODUCTION DATA.

Table of Contents

1 Features ... 1
2 Applications ... 1
3 Description ... 1
4 Revision History ... 2
5 Pin Configuration and Functions ... 3
6 Specifications ... 3
6.1 Absolute Maximum Ratings ... 3
6.2 ESD Ratings ... 4
6.3 Recommended Operating Conditions ... 4
6.4 Thermal Information ... 4
6.5 Electrical Characteristics ... 5
6.6 Switching Characteristics: C_L = 15 pF ... 5
6.7 Switching Characteristics: C_L = 30 pF ... 5
6.8 Operating Characteristics ... 5
7 Parameter Measurement Information ... 6
8 Detailed Description ... 7
8.1 Functional Block Diagram ... 7
8.2 Device Functional Modes ... 7
9 Device and Documentation Support ... 8
9.1 Documentation Support ... 8
9.2 Receiving Notification of Documentation Updates ... 8
9.3 Community Resources ... 8
9.4 Trademarks ... 8
9.5 Electrostatic Discharge Caution ... 8
9.6 Glossary ... 8
10 Mechanical, Packaging, and Orderable Information ... 8

4 Revision History

NOTE: Page numbers for previous revisions may differ from page numbers in the current version.

Changes from Revision O (April 2007) to Revision P	Page
• Deleted DRY Package throughout data sheet	1
• Added *Applications*, *Device Information* table, *ESD Ratings* table, *Thermal Information* table, *Detailed Description*, *Device and Documentation Support*, and *Mechanical, Packaging, and Orderable Information*	1
• Deleted *Ordering Information*, see *Mechanical, Packaging, and Orderable Information*	1

Copyright © 2001–2017, Texas Instruments Incorporated

5 Pin Configuration and Functions

DBV Package
5-Pin SOT-23
Top View

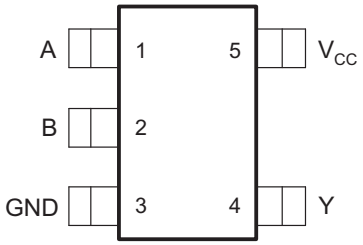

DRL Package
5-Pin SOT-5X3
Top View

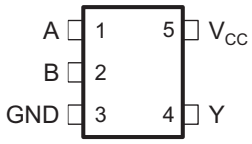

YZP Package
5-Pin DSBGA
Bottom View

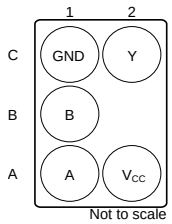

DCK Package
5-Pin SC70
Top View

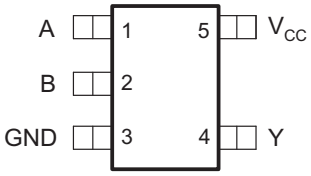

Pin Functions

PIN			I/O	DESCRIPTION
NAME	DBV, DCK, DRL	YZP		
A	1	A1	I	A logic input
B	2	B1	I	B logic input
GND	3	C1	—	Ground
Y	4	C2	O	Y AND Logic Output
V_{CC}	5	A2	—	Positive Supply

6 Specifications

6.1 Absolute Maximum Ratings

over operating free-air temperature range (unless otherwise noted)[(1)]

			MIN	MAX	UNIT
V_{CC}	Supply voltage		–0.5	3.6	V
V_I	Input voltage[(2)]		–0.5	3.6	V
V_O	Voltage range applied to any output in the high-impedance or power-off state[(2)]		–0.5	3.6	V
V_O	Output voltage[(2)]		–0.5	V_{CC} + 0.5	V
I_{IK}	Input clamp current	$V_I < 0$		–50	mA
I_{OK}	Output clamp current	$V_O < 0$		–50	mA
I_O	Continuous output current			±20	mA
	Continuous current through V_{CC} or GND			±100	mA
T_{stg}	Storage temperature		–65	150	°C

(1) Stresses beyond those listed under *Absolute Maximum Ratings* may cause permanent damage to the device. These are stress ratings only, which do not imply functional operation of the device at these or any other conditions beyond those indicated under *Recommended Operating Conditions*. Exposure to absolute-maximum-rated conditions for extended periods may affect device reliability.
(2) The input negative-voltage and output voltage ratings may be exceeded if the input and output current ratings are observed.

Copyright © 2001–2017, Texas Instruments Incorporated

6.2 ESD Ratings

			VALUE	UNIT
$V_{(ESD)}$	Electrostatic discharge	Human-body model (HBM), per ANSI/ESDA/JEDEC JS-001 (1)	2000	V
		Charged-device model (CDM), per JEDEC specification JESD22-C101 (2)	1000	
		Machine Model (A115-A)	200	

(1) JEDEC document JEP155 states that 500-V HBM allows safe manufacturing with a standard ESD control process.
(2) JEDEC document JEP157 states that 250-V CDM allows safe manufacturing with a standard ESD control process.

6.3 Recommended Operating Conditions

See (1)

			MIN	MAX	UNIT
V_{CC}	Supply voltage		0.8	2.7	V
V_{IH}	High-level input voltage	V_{CC} = 0.8 V to 1.95 V	0.65 × V_{CC}		V
		V_{CC} = 2.3 V to 2.7 V	1.7		
V_{IL}	Low-level input voltage	V_{CC} = 0.8 V to 1.95 V		0.35 × V_{CC}	V
		V_{CC} = 2.3 V to 2.7 V		0.7	
V_I	Input voltage		0	3.6	V
V_O	Output voltage		0	V_{CC}	V
I_{OH}	High-level output current	V_{CC} = 0.8 V		–0.7	mA
		V_{CC} = 1.1 V		–3	
		V_{CC} = 1.4 V		–5	
		V_{CC} = 1.65 V		–8	
		V_{CC} = 2.3 V		–9	
I_{OL}	Low-level output current	V_{CC} = 0.8 V		0.7	mA
		V_{CC} = 1.1 V		3	
		V_{CC} = 1.4 V		5	
		V_{CC} = 1.65 V		8	
		V_{CC} = 2.3 V		9	
$\Delta t/\Delta v$	Input transition rise or fall rate	V_{CC} = 0.8 V to 1.95 V		20	ns/V
		V_{CC} = 2.3 V to 2.7 V		10	
T_A	Operating free-air temperature		–40	85	°C

(1) All unused inputs of the device must be held at V_{CC} or GND to ensure proper device operation. See *Implications of Slow or Floating CMOS Inputs*, SCBA004.

6.4 Thermal Information

THERMAL METRIC (1)		SN74AUC1G08				UNIT
		DBV (SOT-23)	DCK (SC70)	DRL (SOT-5X3)	YZP (DSBGA)	
		5 PINS	5 PINS	5 PINS	5 PINS	
$R_{\theta JA}$	Junction-to-ambient thermal resistance	206	252	142	132	°C/W

(1) For more information about traditional and new thermal metrics, see the *Semiconductor and IC Package Thermal Metrics* application report.

Copyright © 2001–2017, Texas Instruments Incorporated

6.5 Electrical Characteristics

over recommended operating free-air temperature range (unless otherwise noted)

PARAMETER		TEST CONDITIONS	V_{CC}	MIN	TYP (1)	MAX	UNIT
V_{OH}		I_{OH} = –100 µA	0.8 V to 2.7 V	V_{CC} – 0.1			V
		I_{OH} = –0.7 mA	0.8 V		0.55		
		I_{OH} = –3 mA	1.1 V	0.8			
		I_{OH} = –5 mA	1.4 V	1			
		I_{OH} = –8 mA	1.65 V	1.2			
		I_{OH} = –9 mA	2.3 V	1.8			
V_{OL}		I_{OL} = 100 µA	0.8 V to 2.7 V			0.2	V
		I_{OL} = 0.7 mA	0.8 V		0.25		
		I_{OL} = 3 mA	1.1 V			0.3	
		I_{OL} = 5 mA	1.4 V			0.4	
		I_{OL} = 8 mA	1.65 V			0.45	
		I_{OL} = 9 mA	2.3 V			0.6	
I_I	A or B input	V_I = V_{CC} or GND	0 to 2.7 V			±5	µA
I_{off}		V_I or V_O = 2.7 V	0			±10	µA
I_{CC}		V_I = V_{CC} or GND, I_O = 0	0.8 V to 2.7 V			10	µA
C_I		V_I = V_{CC} or GND	2.5 V		3		pF

(1) All typical values are at T_A = 25°C.

6.6 Switching Characteristics: C_L = 15 pF

over recommended operating free-air temperature range, C_L = 15 pF (unless otherwise noted) (see Figure 1)

PARAMETER	FROM (INPUT)	TO (OUTPUT)	V_{CC} = 0.8 V	V_{CC} = 1.2 V ± 0.1 V		V_{CC} = 1.5 V ± 0.1 V		V_{CC} = 1.8 V ± 0.15 V			V_{CC} = 2.5 V ± 0.2 V		UNIT
			TYP	MIN	MAX	MIN	MAX	MIN	TYP	MAX	MIN	MAX	
t_{pd}	A or B	Y	4.7	0.9	3.3	0.6	2.3	0.4	1.1	1.7	0.2	1.6	ns

6.7 Switching Characteristics: C_L = 30 pF

over recommended operating free-air temperature range, C_L = 30 pF (unless otherwise noted) (see Figure 1)

PARAMETER	FROM (INPUT)	TO (OUTPUT)	V_{CC} = 1.8 V ± 0.15 V			V_{CC} = 2.5 V ± 0.2 V		UNIT
			MIN	TYP	MAX	MIN	MAX	
t_{pd}	A or B	Y	0.7	1.3	2.4	0.5	2	ns

6.8 Operating Characteristics

T_A = 25°C

PARAMETER		TEST CONDITIONS	V_{CC} = 0.8 V	V_{CC} = 1.2 V	V_{CC} = 1.5 V	V_{CC} = 1.8 V	V_{CC} = 2.5 V	UNIT
			TYP	TYP	TYP	TYP	TYP	
C_{pd}	Power dissipation capacitance	f = 10 MHz	15	15	15	15	19	pF

Copyright © 2001–2017, Texas Instruments Incorporated

7 Parameter Measurement Information

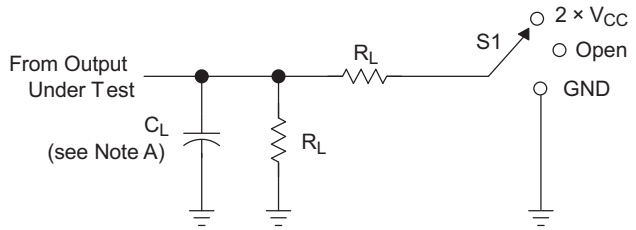

LOAD CIRCUIT

TEST	S1
t_{PLH}/t_{PHL} t_{PLZ}/t_{PZL} t_{PHZ}/t_{PZH}	Open 2 × V_{CC} GND

V_{CC}	C_L	R_L	V_D
0.8 V	15 pF	2 kΩ	0.1 V
1.2 V ± 0.1 V	15 pF	2 kΩ	0.1 V
1.5 V ± 0.1 V	15 pF	2 kΩ	0.1 V
1.8 V ± 0.15 V	15 pF	2 kΩ	0.15 V
2.5 V ± 0.2 V	15 pF	2 kΩ	0.15 V
1.8 V ± 0.15 V	30 pF	1 kΩ	0.15 V
2.5 V ± 0.2 V	30 pF	500 Ω	0.15 V

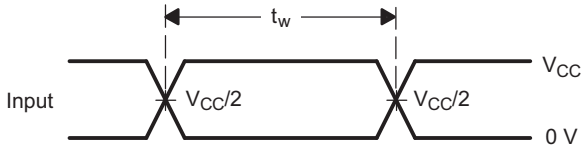

VOLTAGE WAVEFORMS
PULSE DURATION

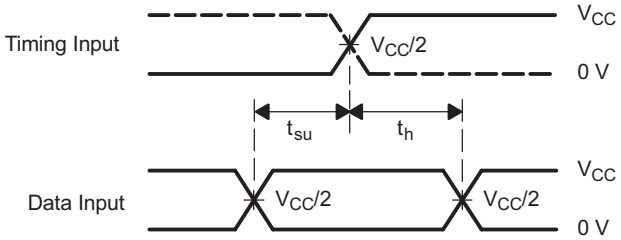

VOLTAGE WAVEFORMS
SETUP AND HOLD TIMES

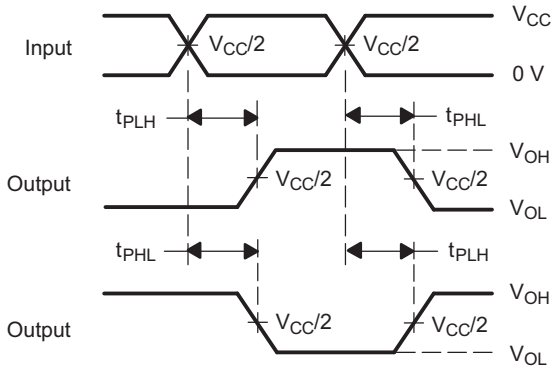

VOLTAGE WAVEFORMS
PROPAGATION DELAY TIMES
INVERTING AND NONINVERTING OUTPUTS

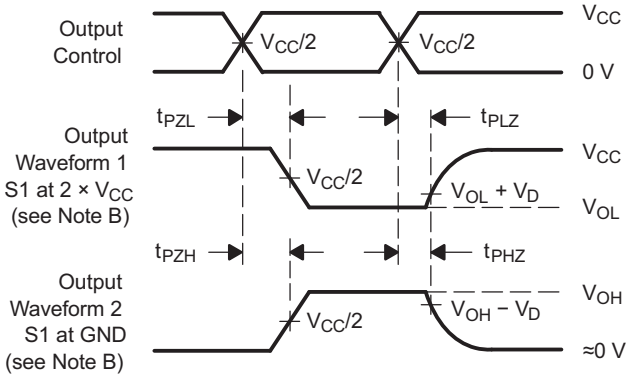

VOLTAGE WAVEFORMS
ENABLE AND DISABLE TIMES
LOW- AND HIGH-LEVEL ENABLING

NOTES:
A. C_L includes probe and jig capacitance.
B. Waveform 1 is for an output with internal conditions such that the output is low, except when disabled by the output control. Waveform 2 is for an output with internal conditions such that the output is high, except when disabled by the output control.
C. All input pulses are supplied by generators having the following characteristics: PRR ≤ 10 MHz, Z_O = 50 Ω, slew rate ≥ 1 V/ns.
D. The outputs are measured one at a time, with one transition per measurement.
E. t_{PLZ} and t_{PHZ} are the same as t_{dis}.
F. t_{PZL} and t_{PZH} are the same as t_{en}.
G. t_{PLH} and t_{PHL} are the same as t_{pd}.
H. All parameters and waveforms are not applicable to all devices.

Figure 1. Load Circuit and Voltage Waveforms

Copyright © 2001–2017, Texas Instruments Incorporated

8 Detailed Description

8.1 Functional Block Diagram

Figure 2. Logic Diagram (Positive Logic)

8.2 Device Functional Modes

Table 1 lists the functional modes of the SN74AUC1G08.

Table 1. Function Table

INPUTS		OUTPUT Y
A	B	
H	H	H
L	X	L
X	L	L

9 Device and Documentation Support

9.1 Documentation Support

9.1.1 Related Documentation

For related documentation see the following:

Implications of Slow or Floating CMOS Inputs, SCBA004.

9.2 Receiving Notification of Documentation Updates

To receive notification of documentation updates, navigate to the device product folder on ti.com. In the upper right corner, click on *Alert me* to register and receive a weekly digest of any product information that has changed. For change details, review the revision history included in any revised document.

9.3 Community Resources

The following links connect to TI community resources. Linked contents are provided "AS IS" by the respective contributors. They do not constitute TI specifications and do not necessarily reflect TI's views; see TI's Terms of Use.

TI E2E™ Online Community ***TI's Engineer-to-Engineer (E2E) Community.*** Created to foster collaboration among engineers. At e2e.ti.com, you can ask questions, share knowledge, explore ideas and help solve problems with fellow engineers.

Design Support ***TI's Design Support*** Quickly find helpful E2E forums along with design support tools and contact information for technical support.

9.4 Trademarks

NanoFree, E2E are trademarks of Texas Instruments.
All other trademarks are the property of their respective owners.

9.5 Electrostatic Discharge Caution

These devices have limited built-in ESD protection. The leads should be shorted together or the device placed in conductive foam during storage or handling to prevent electrostatic damage to the MOS gates.

9.6 Glossary

SLYZ022 — *TI Glossary*.

This glossary lists and explains terms, acronyms, and definitions.

10 Mechanical, Packaging, and Orderable Information

The following pages include mechanical, packaging, and orderable information. This information is the most current data available for the designated devices. This data is subject to change without notice and revision of this document. For browser-based versions of this data sheet, refer to the left-hand navigation.

Copyright © 2001–2017, Texas Instruments Incorporated

PACKAGING INFORMATION

Orderable Device	Status (1)	Package Type	Package Drawing	Pins	Package Qty	Eco Plan (2)	Lead finish/ Ball material (6)	MSL Peak Temp (3)	Op Temp (°C)	Device Marking (4/5)	Samples
SN74AUC1G08DBVR	ACTIVE	SOT-23	DBV	5	3000	RoHS & Green	NIPDAU	Level-1-260C-UNLIM	-40 to 85	(U08K, U08R)	Samples
SN74AUC1G08DCKR	ACTIVE	SC70	DCK	5	3000	RoHS & Green	NIPDAU	Level-1-260C-UNLIM	-40 to 85	(UE5, UEF, UER)	Samples
SN74AUC1G08DCKRG4	ACTIVE	SC70	DCK	5	3000	RoHS & Green	NIPDAU	Level-1-260C-UNLIM	-40 to 85	(UE5, UEF, UER)	Samples
SN74AUC1G08DRLR	ACTIVE	SOT-5X3	DRL	5	4000	RoHS & Green	NIPDAUAG	Level-1-260C-UNLIM	-40 to 85	(UE7, UER)	Samples
SN74AUC1G08DRLRG4	ACTIVE	SOT-5X3	DRL	5	4000	RoHS & Green	NIPDAUAG	Level-1-260C-UNLIM	-40 to 85	(UE7, UER)	Samples
SN74AUC1G08YZPR	ACTIVE	DSBGA	YZP	5	3000	RoHS & Green	SNAGCU	Level-1-260C-UNLIM	-40 to 85	UEN	Samples

(1) The marketing status values are defined as follows:
ACTIVE: Product device recommended for new designs.
LIFEBUY: TI has announced that the device will be discontinued, and a lifetime-buy period is in effect.
NRND: Not recommended for new designs. Device is in production to support existing customers, but TI does not recommend using this part in a new design.
PREVIEW: Device has been announced but is not in production. Samples may or may not be available.
OBSOLETE: TI has discontinued the production of the device.

(2) **RoHS:** TI defines "RoHS" to mean semiconductor products that are compliant with the current EU RoHS requirements for all 10 RoHS substances, including the requirement that RoHS substance do not exceed 0.1% by weight in homogeneous materials. Where designed to be soldered at high temperatures, "RoHS" products are suitable for use in specified lead-free processes. TI may reference these types of products as "Pb-Free".
RoHS Exempt: TI defines "RoHS Exempt" to mean products that contain lead but are compliant with EU RoHS pursuant to a specific EU RoHS exemption.
Green: TI defines "Green" to mean the content of Chlorine (Cl) and Bromine (Br) based flame retardants meet JS709B low halogen requirements of <=1000ppm threshold. Antimony trioxide based flame retardants must also meet the <=1000ppm threshold requirement.

(3) MSL, Peak Temp. - The Moisture Sensitivity Level rating according to the JEDEC industry standard classifications, and peak solder temperature.

(4) There may be additional marking, which relates to the logo, the lot trace code information, or the environmental category on the device.

(5) Multiple Device Markings will be inside parentheses. Only one Device Marking contained in parentheses and separated by a "~" will appear on a device. If a line is indented then it is a continuation of the previous line and the two combined represent the entire Device Marking for that device.

(6) Lead finish/Ball material - Orderable Devices may have multiple material finish options. Finish options are separated by a vertical ruled line. Lead finish/Ball material values may wrap to two lines if the finish value exceeds the maximum column width.

Important Information and Disclaimer: The information provided on this page represents TI's knowledge and belief as of the date that it is provided. TI bases its knowledge and belief on information provided by third parties, and makes no representation or warranty as to the accuracy of such information. Efforts are underway to better integrate information from third parties. TI has taken and continues to take reasonable steps to provide representative and accurate information but may not have conducted destructive testing or chemical analysis on incoming materials and chemicals. TI and TI suppliers consider certain information to be proprietary, and thus CAS numbers and other limited information may not be available for release.

In no event shall TI's liability arising out of such information exceed the total purchase price of the TI part(s) at issue in this document sold by TI to Customer on an annual basis.

TAPE AND REEL INFORMATION

REEL DIMENSIONS

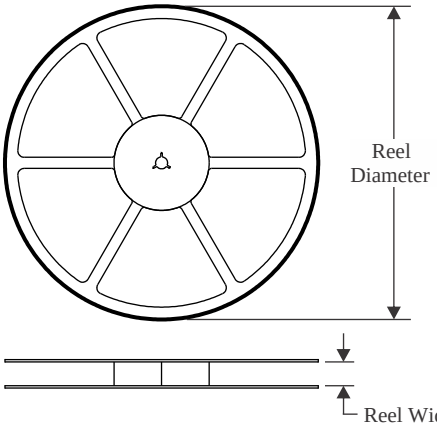

TAPE DIMENSIONS

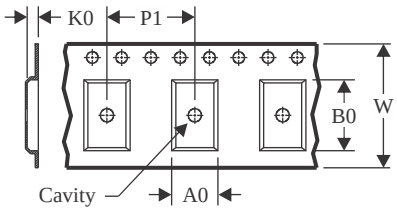

A0	Dimension designed to accommodate the component width
B0	Dimension designed to accommodate the component length
K0	Dimension designed to accommodate the component thickness
W	Overall width of the carrier tape
P1	Pitch between successive cavity centers

QUADRANT ASSIGNMENTS FOR PIN 1 ORIENTATION IN TAPE

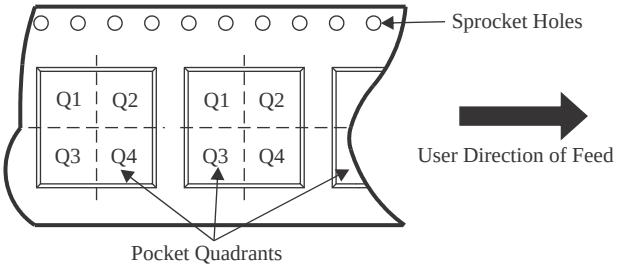

*All dimensions are nominal

Device	Package Type	Package Drawing	Pins	SPQ	Reel Diameter (mm)	Reel Width W1 (mm)	A0 (mm)	B0 (mm)	K0 (mm)	P1 (mm)	W (mm)	Pin1 Quadrant
SN74AUC1G08DBVR	SOT-23	DBV	5	3000	180.0	8.4	3.23	3.17	1.37	4.0	8.0	Q3
SN74AUC1G08DBVR	SOT-23	DBV	5	3000	180.0	8.4	3.17	3.23	1.37	4.0	8.0	Q3
SN74AUC1G08DCKR	SC70	DCK	5	3000	178.0	9.0	2.4	2.5	1.2	4.0	8.0	Q3
SN74AUC1G08DRLR	SOT-5X3	DRL	5	4000	180.0	8.4	1.98	1.78	0.69	4.0	8.0	Q3
SN74AUC1G08YZPR	DSBGA	YZP	5	3000	178.0	9.2	1.02	1.52	0.63	4.0	8.0	Q1

TAPE AND REEL BOX DIMENSIONS

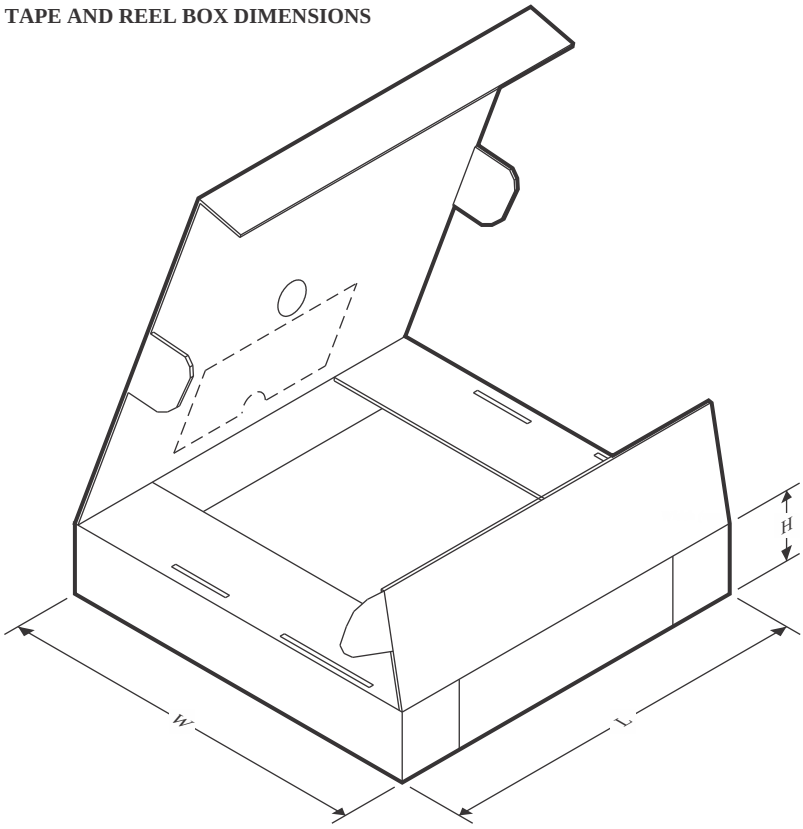

*All dimensions are nominal

Device	Package Type	Package Drawing	Pins	SPQ	Length (mm)	Width (mm)	Height (mm)
SN74AUC1G08DBVR	SOT-23	DBV	5	3000	202.0	201.0	28.0
SN74AUC1G08DBVR	SOT-23	DBV	5	3000	205.0	200.0	33.0
SN74AUC1G08DCKR	SC70	DCK	5	3000	180.0	180.0	18.0
SN74AUC1G08DRLR	SOT-5X3	DRL	5	4000	202.0	201.0	28.0
SN74AUC1G08YZPR	DSBGA	YZP	5	3000	220.0	220.0	35.0

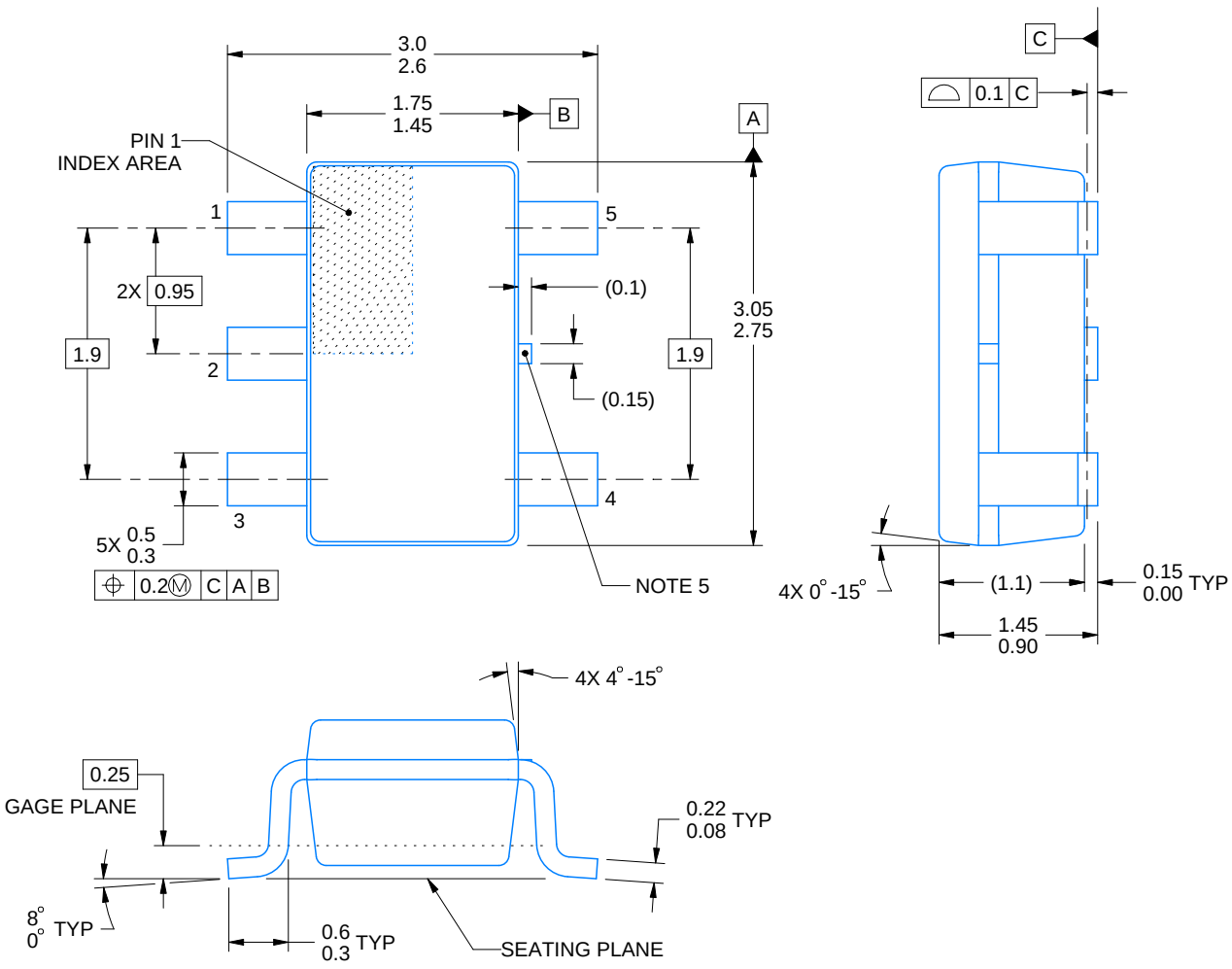

4214839/K 08/2024

NOTES:

1. All linear dimensions are in millimeters. Any dimensions in parenthesis are for reference only. Dimensioning and tolerancing per ASME Y14.5M.
2. This drawing is subject to change without notice.
3. Refernce JEDEC MO-178.
4. Body dimensions do not include mold flash, protrusions, or gate burrs. Mold flash, protrusions, or gate burrs shall not exceed 0.25 mm per side.
5. Support pin may differ or may not be present.

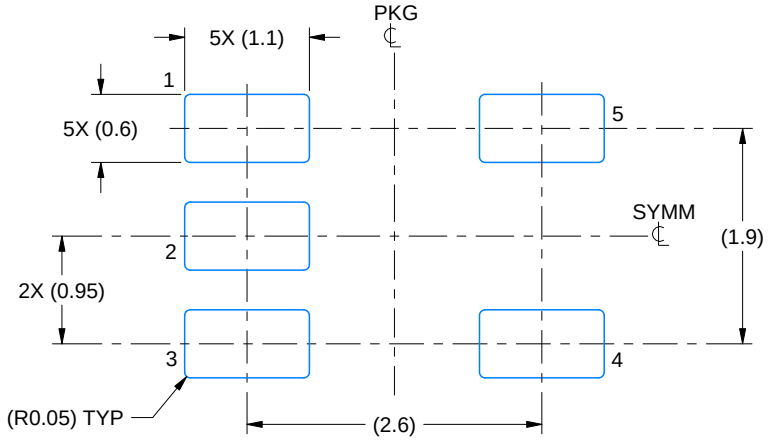

LAND PATTERN EXAMPLE
EXPOSED METAL SHOWN
SCALE:15X

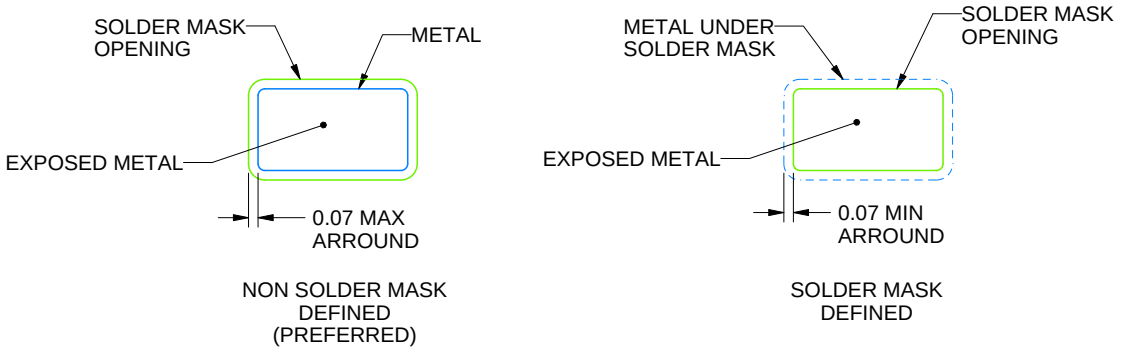

SOLDER MASK DETAILS

4214839/K 08/2024

NOTES: (continued)

6. Publication IPC-7351 may have alternate designs.
7. Solder mask tolerances between and around signal pads can vary based on board fabrication site.

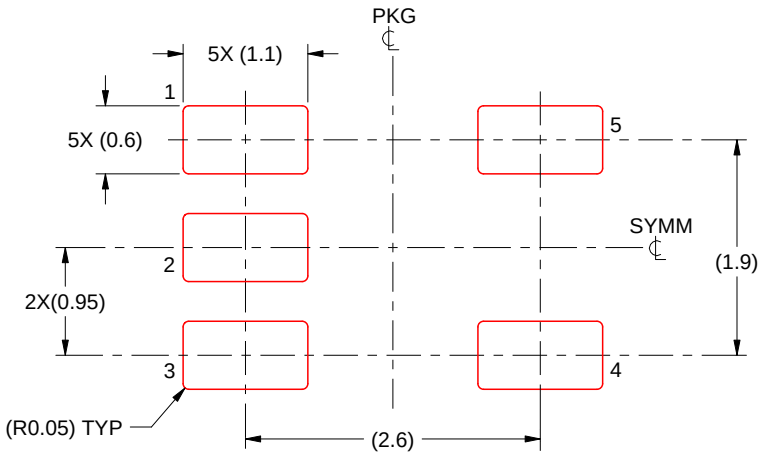

SOLDER PASTE EXAMPLE
BASED ON 0.125 mm THICK STENCIL
SCALE:15X

4214839/K 08/2024

NOTES: (continued)

8. Laser cutting apertures with trapezoidal walls and rounded corners may offer better paste release. IPC-7525 may have alternate design recommendations.
9. Board assembly site may have different recommendations for stencil design.

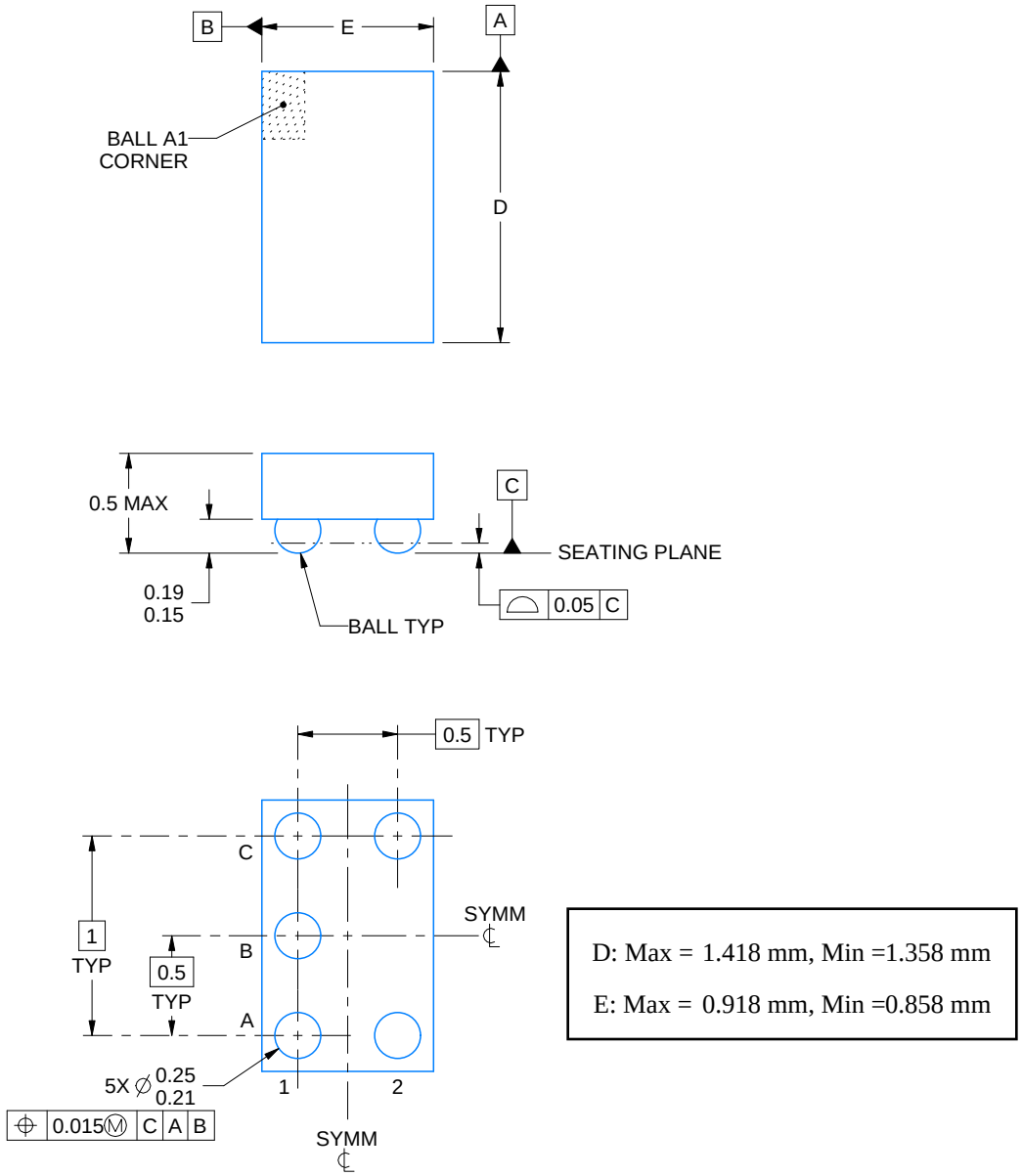

NOTES:

1. All linear dimensions are in millimeters. Any dimensions in parenthesis are for reference only. Dimensioning and tolerancing per ASME Y14.5M.
2. This drawing is subject to change without notice.

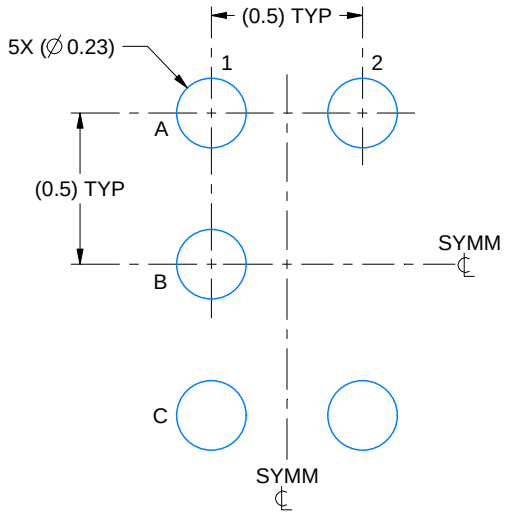

LAND PATTERN EXAMPLE
SCALE:40X

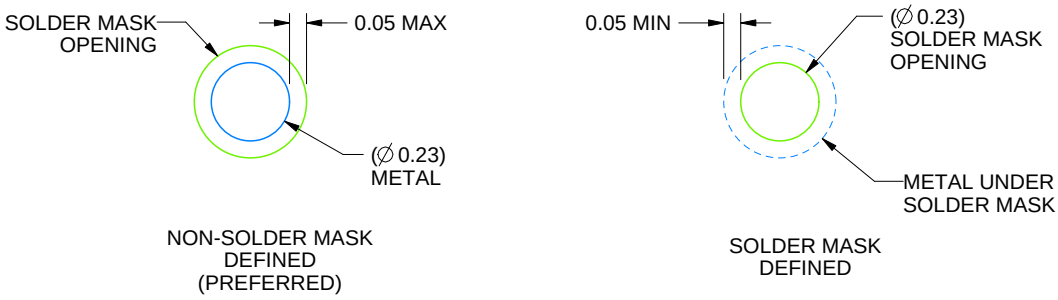

SOLDER MASK DETAILS
NOT TO SCALE

4219492/A 05/2017

NOTES: (continued)

3. Final dimensions may vary due to manufacturing tolerance considerations and also routing constraints. For more information, see Texas Instruments literature number SNVA009 (www.ti.com/lit/snva009).

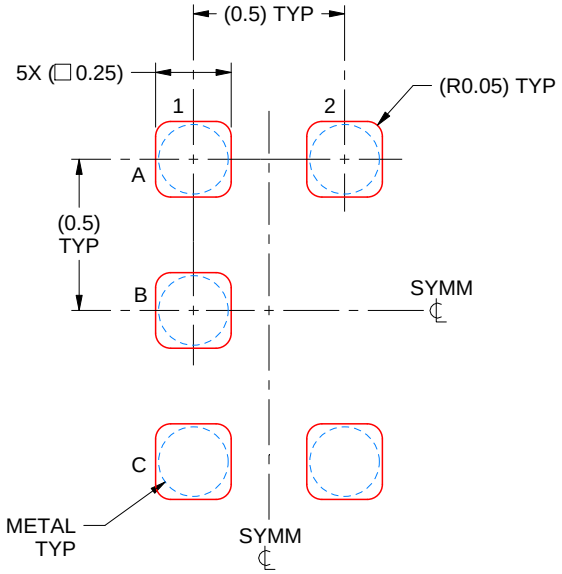

SOLDER PASTE EXAMPLE
BASED ON 0.1 mm THICK STENCIL
SCALE:40X

4219492/A 05/2017

NOTES: (continued)

4. Laser cutting apertures with trapezoidal walls and rounded corners may offer better paste release.

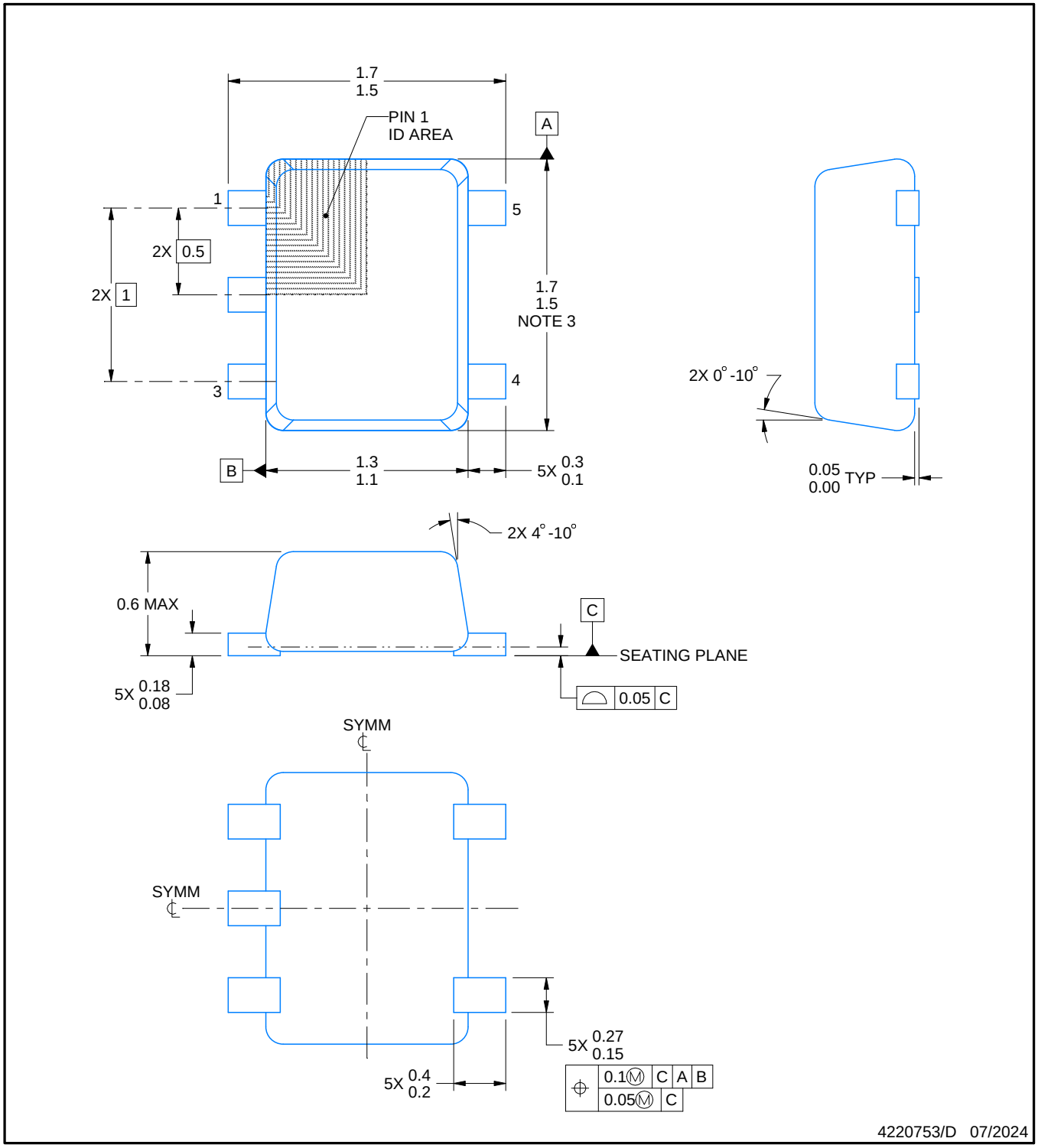

NOTES:

1. All linear dimensions are in millimeters. Any dimensions in parenthesis are for reference only. Dimensioning and tolerancing per ASME Y14.5M.
2. This drawing is subject to change without notice.
3. This dimension does not include mold flash, protrusions, or gate burrs. Mold flash, protrusions, or gate burrs shall not exceed 0.15 mm per side.
4. Reference JEDEC registration MO-293 Variation UAAD-1

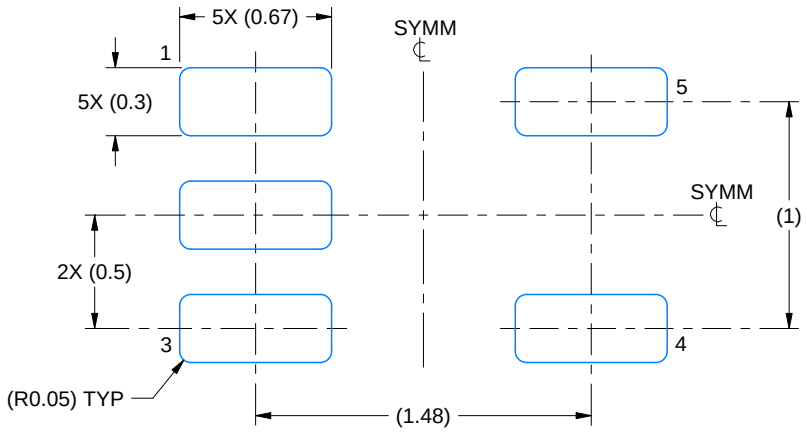

LAND PATTERN EXAMPLE
SCALE:30X

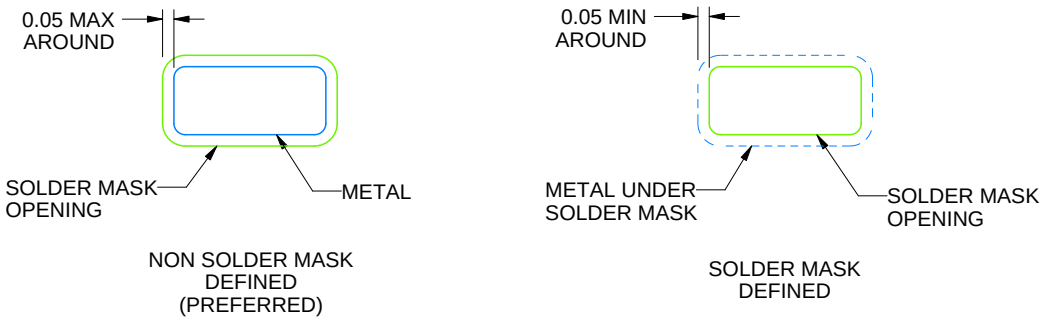

SOLDERMASK DETAILS

4220753/D 07/2024

NOTES: (continued)

5. Publication IPC-7351 may have alternate designs.
6. Solder mask tolerances between and around signal pads can vary based on board fabrication site.

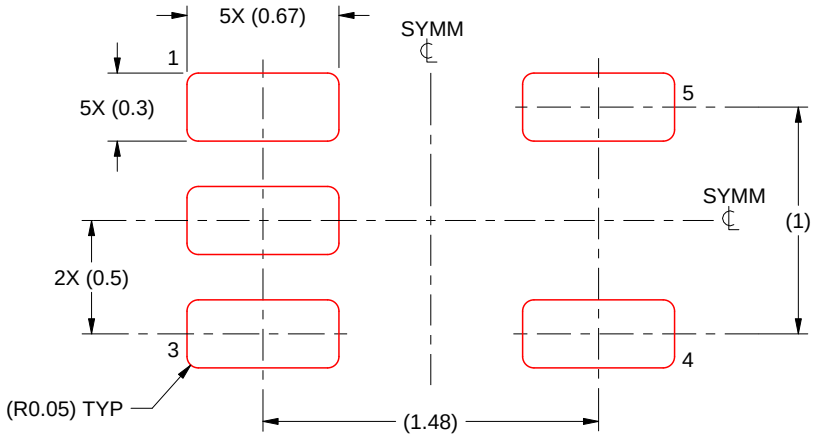

SOLDER PASTE EXAMPLE
BASED ON 0.1 mm THICK STENCIL
SCALE:30X

4220753/D 07/2024

NOTES: (continued)

7. Laser cutting apertures with trapezoidal walls and rounded corners may offer better paste release. IPC-7525 may have alternate design recommendations.
8. Board assembly site may have different recommendations for stencil design.

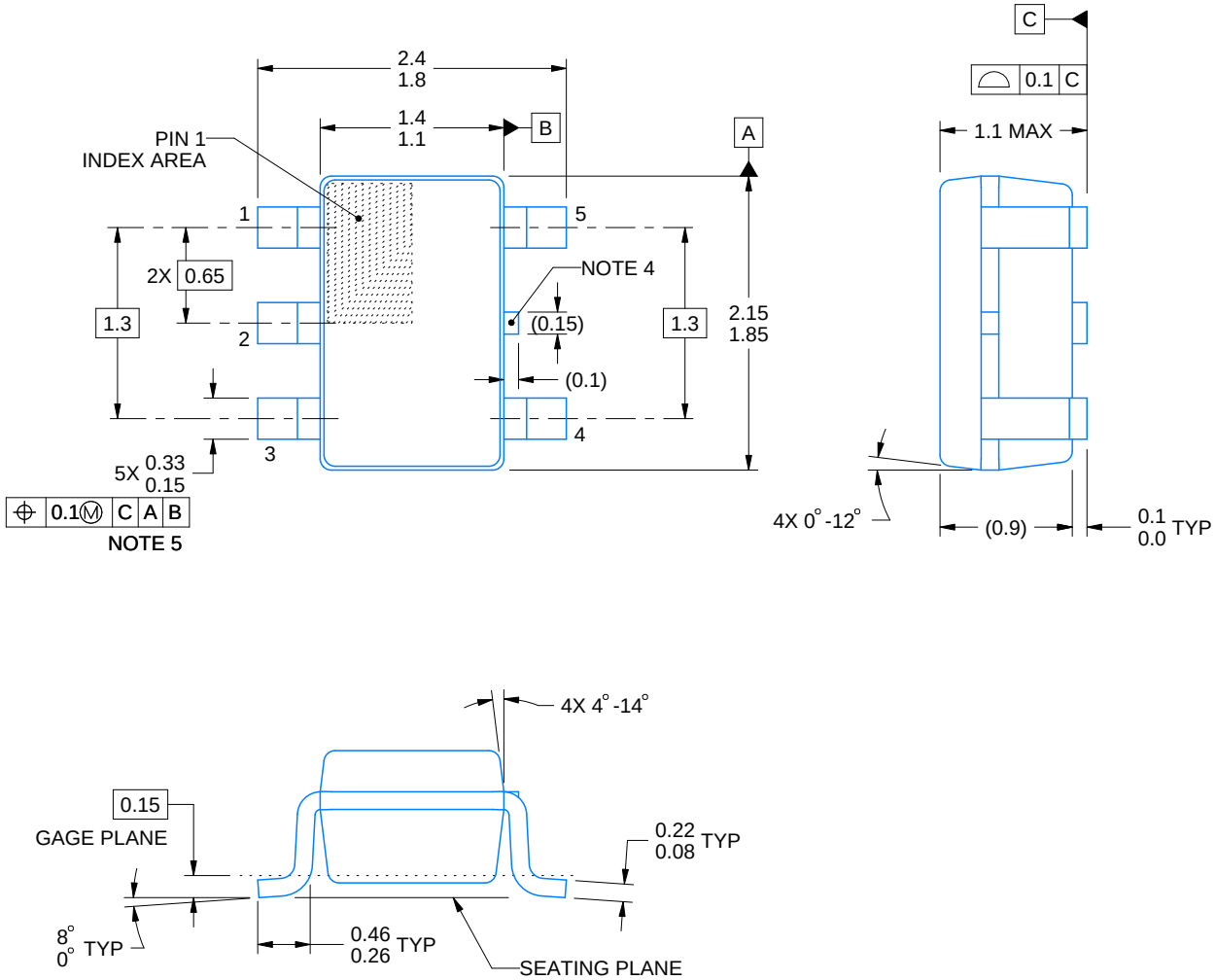

4214834/F 08/2024

NOTES:

1. All linear dimensions are in millimeters. Any dimensions in parenthesis are for reference only. Dimensioning and tolerancing per ASME Y14.5M.
2. This drawing is subject to change without notice.
3. Refernce JEDEC MO-203.
4. Support pin may differ or may not be present.
5. Lead width does not comply with JEDEC.
6. Body dimensions do not include mold flash, protrusions, or gate burrs. Mold flash, protrusions, or gate burrs shall not exceed 0.25mm per side

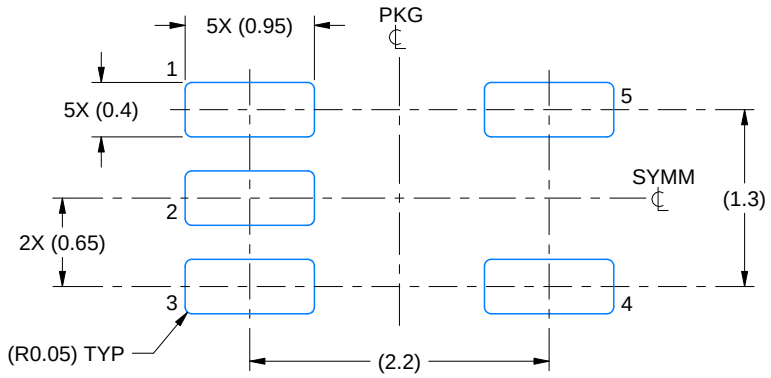

LAND PATTERN EXAMPLE
EXPOSED METAL SHOWN
SCALE:18X

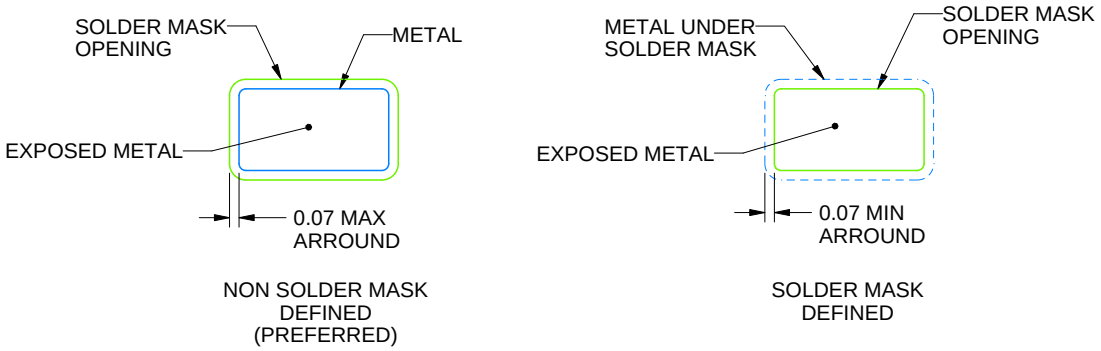

SOLDER MASK DETAILS

4214834/F 08/2024

NOTES: (continued)

7. Publication IPC-7351 may have alternate designs.
8. Solder mask tolerances between and around signal pads can vary based on board fabrication site.

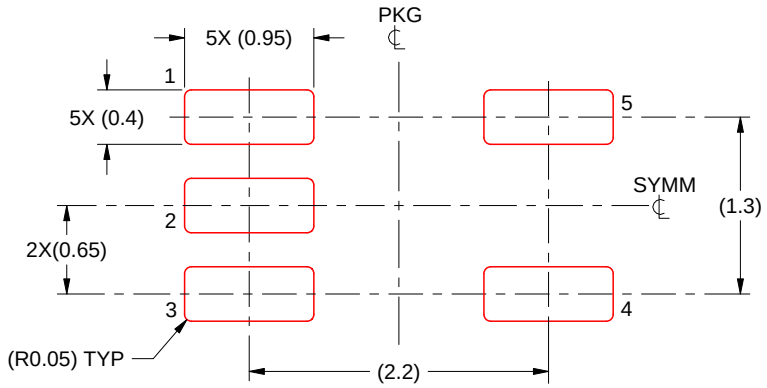

SOLDER PASTE EXAMPLE
BASED ON 0.125 THICK STENCIL
SCALE:18X

4214834/F 08/2024

NOTES: (continued)

9. Laser cutting apertures with trapezoidal walls and rounded corners may offer better paste release. IPC-7525 may have alternate design recommendations.
10. Board assembly site may have different recommendations for stencil design.

IMPORTANT NOTICE AND DISCLAIMER

TI PROVIDES TECHNICAL AND RELIABILITY DATA (INCLUDING DATA SHEETS), DESIGN RESOURCES (INCLUDING REFERENCE DESIGNS), APPLICATION OR OTHER DESIGN ADVICE, WEB TOOLS, SAFETY INFORMATION, AND OTHER RESOURCES “AS IS” AND WITH ALL FAULTS, AND DISCLAIMS ALL WARRANTIES, EXPRESS AND IMPLIED, INCLUDING WITHOUT LIMITATION ANY IMPLIED WARRANTIES OF MERCHANTABILITY, FITNESS FOR A PARTICULAR PURPOSE OR NON-INFRINGEMENT OF THIRD PARTY INTELLECTUAL PROPERTY RIGHTS.

These resources are intended for skilled developers designing with TI products. You are solely responsible for (1) selecting the appropriate TI products for your application, (2) designing, validating and testing your application, and (3) ensuring your application meets applicable standards, and any other safety, security, regulatory or other requirements.

These resources are subject to change without notice. TI grants you permission to use these resources only for development of an application that uses the TI products described in the resource. Other reproduction and display of these resources is prohibited. No license is granted to any other TI intellectual property right or to any third party intellectual property right. TI disclaims responsibility for, and you will fully indemnify TI and its representatives against, any claims, damages, costs, losses, and liabilities arising out of your use of these resources.

TI’s products are provided subject to TI’s Terms of Sale or other applicable terms available either on ti.com or provided in conjunction with such TI products. TI’s provision of these resources does not expand or otherwise alter TI’s applicable warranties or warranty disclaimers for TI products.

TI objects to and rejects any additional or different terms you may have proposed.

Mailing Address: Texas Instruments, Post Office Box 655303, Dallas, Texas 75265
Copyright © 2024, Texas Instruments Incorporated