ITEM NO.	PART NUMBER	DESCRIPTION	QTY.	COMPONENT NOTES
1	50-00057	Connector, dc jack, 3.5x1.35xL16.5 mm, molding style	1	
2	30-00405	Wire, 2C TS, 24 AWG, UL2468, 300V, 80C, 3.0 mm, VW-1, PVC, 87A, white	1	
3	24-00005	Overmold, PVC, white	1	

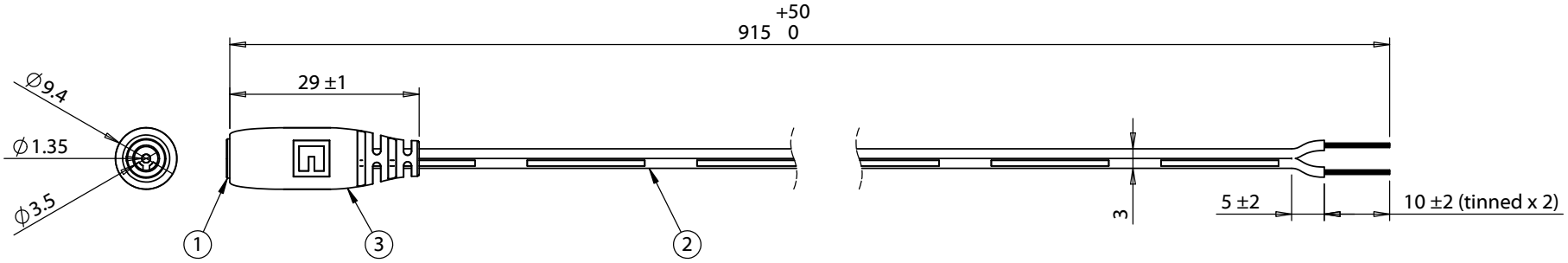

Notes:
Cables individually tied and bundled in groups of 10

Functionally equivalent components may be substituted

4.5 A, 48 Vdc

Wiring Diagram	
50-00057	wire color
center	white with stripe
sleeve	white

Revision:	Date:	Description:
A	12/22/2015	Initial release

Prepared: AL Digitally signed by AL Date: 2024.06.18 09:23:56 -07'00'

Verified: LV Digitally signed by LV Date: 2024.06.19 15:27:52 -07'00'

Dimensions are in millimeters.
Tolerances:
X: ± 0.5 mm
X.X: ± 0.3 mm
X.XX: ± 0.05 mm

Notes:

RoHS compliant

Function test: no open, no short circuit, no intermittent

Description:

Cable, 915 mm, 3.5x1.35 mm 50-00057 dc jack to stripped tinned, 24 AWG, 30-00405 wire, white

TENSILITY

tel 1.541.323.3228 *800* 877.670.7118
fax 1.541.323.4202 *web* tensility.com

Size: A

Part number: 10-01269

Scale: 1:2

Sheet 1 of 1

5 4 3 2 1

To see a custom version of this cable assembly, call Tensility at 541-323-3228 or email engineering@tensility.com