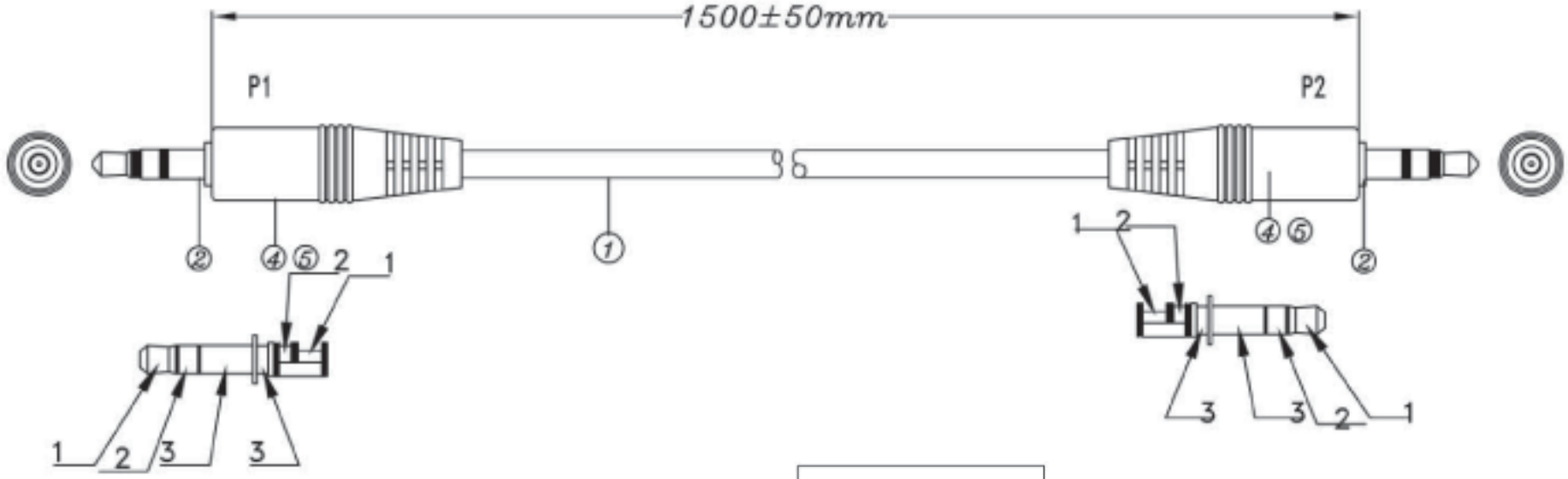

Electrical test:
1. 100% short, open, miswire test
2. Conduct resistance: 2 Ohm(max)
3. Insulation resistance: 1Mohm(min)
4. dielectric test: DC 300V

PIN ASSIGNMENT

P1		P2
1	RED	1
2	WHITE	2
3	S	3

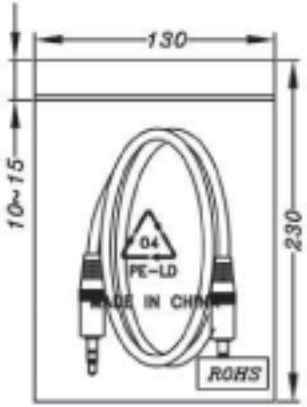

NO.	PART NO.	DESCRIPTION	VENDER	QTY	UNIT/REF
5		OUTER MODEL PVC 45P COLOR BLACK		4.8	g
4		ROUND TIN OD1.0mm		0.15	g
3		3.5 STEREO JACK OD8.0mm		1	P2
2		3.5 STEREO PLUG PLATE NICKEL L=30mm		1	P1
1		T.C (7/0.12*2C+43/0.12)*1C (RED,WHITE)#3.0 COLOR BLACK(CS-001)	01	1	1500mm

Scale	1:1						Name
TOLERANCE					Drawn	01.03.12	Chappell
X.X	±0.40				Approved		
X.XX	±0.25						
X.XXX	±0.15						
Angle	±3°						
			Modification	Date	Name		

RoHS Complaint

ASSMANN WSW components

Item No.
AK-AV100-R (1.50M)

Title
Stereo Connection Cable, 3-Pin, 3.5mm Stereo Male to 3.5mm Stereo Male

Drawing No.

rev00

Replace

Sheet