ITEM NO.	PART NUMBER	DESCRIPTION	QTY.	COMPONENT NOTES
1	TLY-13	NEMA 5-15P	1	black overmold
2	TLY-18	C13 female	1	black overmold
3	30-00248	Wire, 3C, 18 AWG, UL SJT, 300V, 105°C, 7.75 mm, VW-1, PVC	1	
4	Label	Adhesive flag, 15x100 mm	1	white with black font

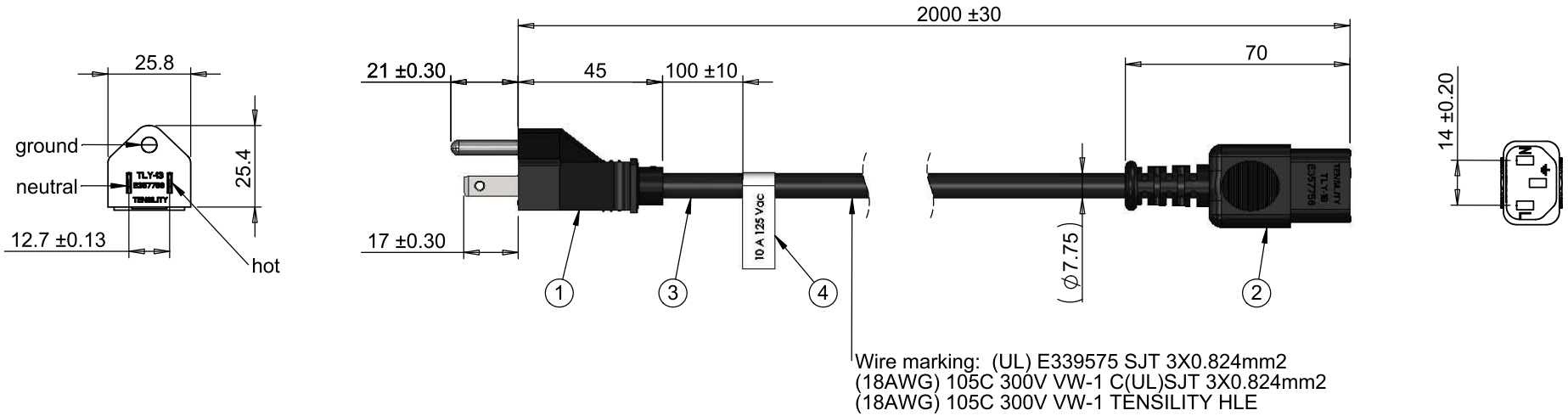

Wiring Diagram		
5-15P	wire color	C13
hot	black	line
neutral	white	neutral
ground	green	ground

Notes:
Electrical requirements: 10 A at 125 Vac

Revision:	Date:	Description:
A	12/19/2012	Initial release

Prepared: DN Digitally signed by DN Date: 2017.01.25 07:21:09 -08'00'

Verified: PS Digitally signed by PS Date: 2017.01.26 14:36:07 -08'00'

Dimensions are in millimeters.
Tolerances:
X: ± 0.5 mm
X.X: ± 0.3 mm
X.XX: ± 0.05 mm

Notes:

RoHS compliant

Function test: no open, no short circuit, no intermittent

Description:

Ac cord, 2000 mm, U.S, NEMA 5-15P plug, TLY-13 to C13, TLY-18, 18 AWG, SJT wire, 30-00248

TENSILITY
tel 1.541.323.3228 800 877.670.7118
fax 1.541.323.4202 web tensility.com

Size: A
Part number: 11-00017
Scale: 1:5
Sheet 1 of 1

5 4 3 2 1