Rear View of Assembly

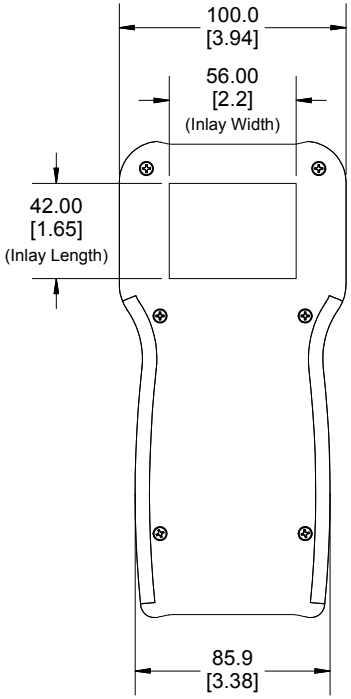

Top View of Assembly

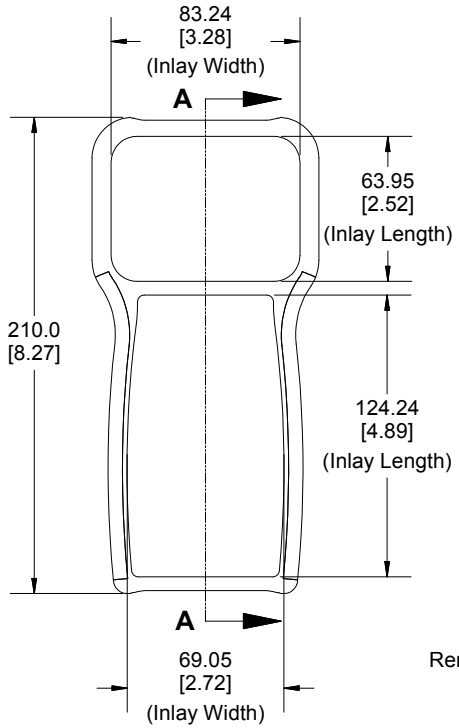

SECTION A-A
(Side View of Assembly)

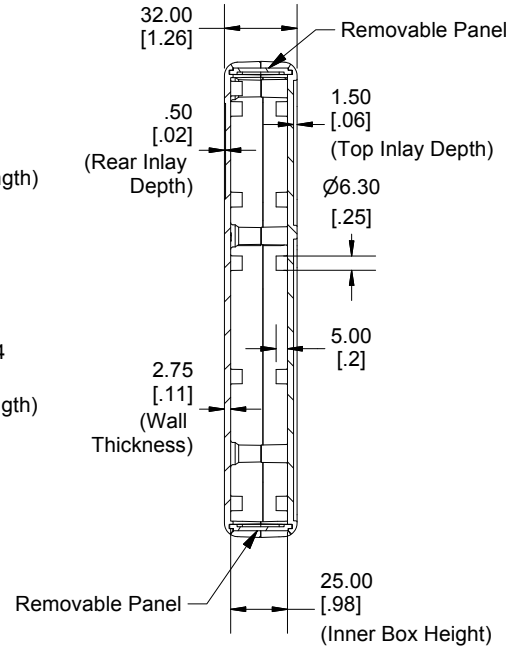

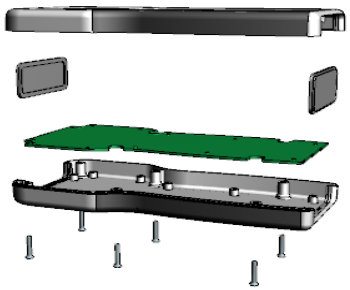

Enclosures can be Factory Modified (Milling, Drilling, Printing etc.)
Contact Factory mjm@hammondmfg.com for quotes
Solid models of this enclosure available in STEP or IGES.
(Part number and text placement/orientation on our products are subject to change, we do not recommend using them as a locating reference for modification purposes)

NOTE
Enclosure made from FR ABS (UL 94-V0) plastic.
Purchased assembly includes Top, Bottom, front plastic panel and 6Cover Screws. M3 Brass Inserts are Pre-Installed.
Recommended Cover screw torque -- 2.5 lbf-in (30 cN-m)

Bottom End View of Assembly

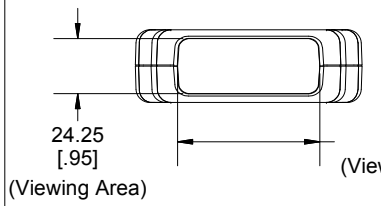

Front/Rear Panel

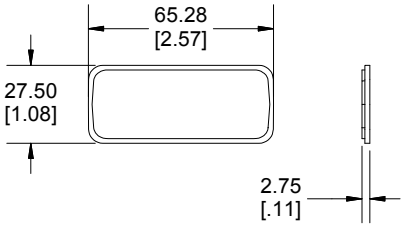

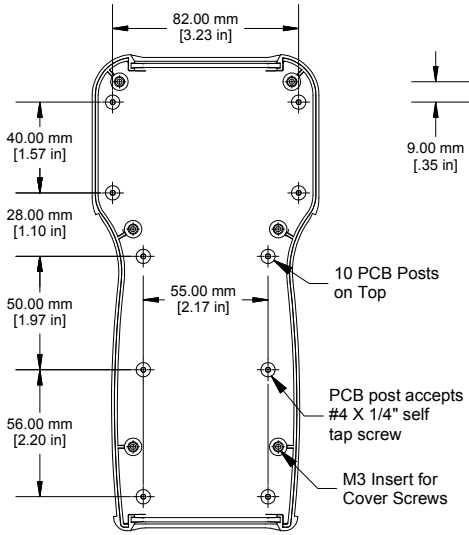

Inside View of Top

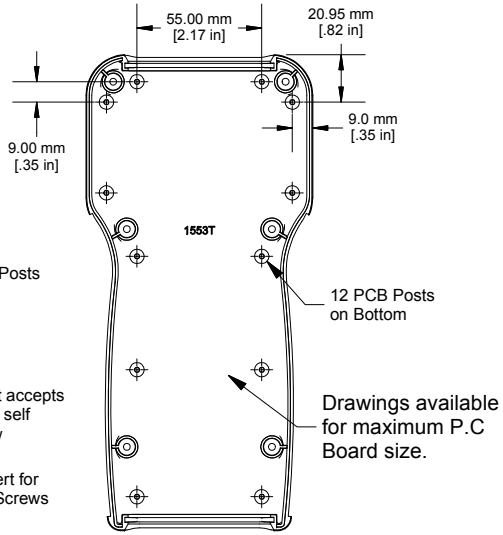

Inside View of Bottom

Dimensions:
mm
[inches]

PART NUMBER	
1553T Regular Enclosure	
Black Enclosure/Grey Over-mold	1553TBK
Grey Enclosure/Grey Over-mold	1553TGY
ACCESSORIES	
Cover screw (Pkg 100) [M3-0.5 X 18mm]	1594MS100 (silver) 1594MS100BK (Black)
P.C. Board Self Tapping Screw [#4 X 1/4" (6.4mm) Plated]	1593ATS50 (Pkg 50) 1593ATS100 (Pkg 100)
Belt or Pocket Clip	1599CLIP (Black) 1599CLIPGY (Grey)

HAMMOND MANUFACTURING®

1553T

www.hammondmfg.com